卷册检索号 SEARCH NO. OF THE VOLUME
MLHVDC-ENG-CSI-DD-EC-0101 49-B60011S-D0212

第 1 页 PAGE　共 1 页 OF

图纸文件目录（首页）

CATALOG OF DRAWING DOCUMENTS (HEAD PAGE)

拉合尔±660kV换流站 工程 施工图 阶段
±660kV Lahore Converter Station PROJECT Detail Design DESIGN STAGE

电气 专业 第 02 卷 第 12 册
Electrical SPECIALITY VOLUME 02 BOOK 12

卷册名称 500kV站用变压器回路设备安装图
Volume name The installation drawing of 500kV station transformer circuit equipments

批 准 APPROVED BY	张伟
审 核 REVIEWED BY	田俊强
设计/勘测 DESIGNED BY/ SURVEYED BY	王[illegible]
图纸 5 张 DRAWING NOS.	打印件 0 本 PRINTED COPIES NOS.

序号 No.	图 号 DRAWING NO.	文件名称 DOCUMENT TITLE	版本 EDITION	张 NOS.	本 NOS.	备注 REMARKS
1	B60011S-D0212-001	卷册说明 Description of drawing	A	1		
2	B60011S-D0212-002	500/35kV站用变压器安装图 The installation drawing 500/35kV station transformer	A	1		
3	B60011S-D0212-003	35kV绝缘子安装图 The installation drawing of 35kV insulator	A	1		
4	B60011S-D0212-004	500/35kV站用变压器风冷控制箱安装图 The installation drawing of 500/35kV station transformer air cooling control box	A	1		
5	B60011S-D0212-005	材料汇总表 Material summarization sheet	A	1		

注:

卷册说明

Description of drawing

1. 本卷册为换流站500/35kV降压变压器回路设备安装图，包括#1、#2降压变压器及相关设备。变压器及其风冷控制箱由山东电力设备有限公司成套供货；35kV支柱绝缘子由抚顺电瓷制造有限公司供货。
2. 设备到货后，请核对厂家资料与实际设备尺寸是否保持一致，核对设备端子板开孔尺寸，并配合好相应金具开孔。
3. 设备安装用地脚螺栓均由厂家供货，土建承包人预埋；安装前请核对土建预留孔。
4. 设备支架上下两端预留接地点与接地体连接时，为减小接触电阻，应先去除钢支架接地点处的喷漆层，待连接完成后再进行喷锌及防腐处理。
5. 所有设备的接地端子应可靠接地，如果设备安装在支架上，设备接地端子至支架接地采用150mm^{2}铜绞线，支架采用150mm^{2}铜绞线与主地网用放热焊连接；如果设备直接安装在基础上，设备接地端子采用150mm^{2}铜绞线与主接地网用放热焊连接。
6. 高压套管端子与导线的连接金具开列在49-B60011S-D0211分册，连接导线、间隔棒以及导线与避雷器端子的连接金具开列在49-B60011S-D0201分册。
7. 低压套管端子与导线的连接金具及连接导线、间隔棒开列在49-B60011S-D0211分册，导线与35kV母线的连接金具开列在49-B60011S-D0209分册。
8. 本卷册为电气B包施工范围。

1. The volume is Installation diagram of 500/35kV transformer circuit equipments for converter station, including #1 and #2 transformers and related equipments.Transformer and its air-cooled control box are supplied by Shandong Power Equipment Co., Ltd. 35kV support insulator are supplied by Fushun Electric Porcelain Manufacturing Co., Ltd.
2. After the equipment arrives, please check whether the manufacturer's data is consistent with the actual size, and check the opening size of the terminal board of the equipment, and match the corresponding bushing fitting.
3. The grounding bolts for equipment installation are supplied by the manufacturer, and the civil contractor should be pre-buried. Please check the reserved holes for civil works before installation.
4. When the grounding point of the upper and lower ends of the equipment bracket is connected with the grounding body, in order to reduce the contact resistance, the paint layer at the grounding point of the steel bracket should be removed first, and then sprayed and anticorrosive treated after the connection is completed.
5. The grounding terminal of all equipment should be grounded reliably. If the equipment is installed on the bracket, the grounding terminal of the equipment is grounded to The bracket in 150mm^2 copper wire. The bracket is connected with the main grounding grid by 150mm^2 copper wire. If the equipment is directly installed on the foundation The grounding terminal of the equipment is connected to the main grounding grid by exothermic welding with a 150mm^2 copper wire.
6. The bushing fittings for the high-voltage bushing terminals are listed in 49-B60011S-D0211 volume, and the connecting wires, the spacer bars, and the bushing fittings for the arrester terminals are listed in 49-B60011S-D0201 volume。
7. The bushing fittings for the low-voltage bushing terminals,the connecting wires, the spacer bars are listed in 49-B60011S-D0211 volume. The bushing fittings for 35kV bus bar are listed in 49-B60011S-D0209 volume.
8. The construction of this volume is in the charge of electrical contractor B.

巴基斯坦默蒂亚里—拉合尔±660kV直流输电工程

±660kV HVDC Project from Matiari to Lahore in Pakistan

NATIONAL TRANSMISSION & DESPATCH COMPANY (NTDC) LIMITED PAKISTAN

CONTRACTOR 国家电网 STATE GRID 中国电力技术装备有限公司 CHINA ELECTRIC POWER EQUIPMENT AND TECHNOLOGY CO.,LTD.

拉合尔±660kV换流站

±660kV Lahore Converter Station

设计阶段 PHASE: 施工图 Detail Design

M L H V D C - E N G - C S I - D D - E C - 0 2 1 2 - 0 0 1 A

	姓名 Name	日期 Date
设计 Designed	王[illegible]	2019.03.22
校核 Checked	[illegible]	2019.03.22
审核 Reviewed	田[illegible]	2019.03.22
批准 Approved	[illegible]	2019.03.22

卷册说明

Description of drawing

比例 Scale | 图号 DWG NO. B60011S-D0212-001 | 版本 REV. A

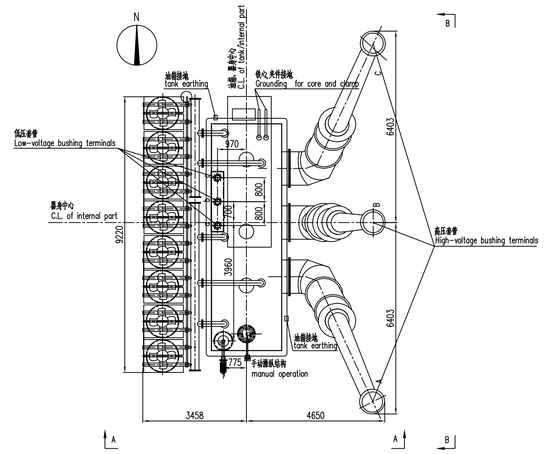

500kV站用变压器平面布置图

Layout drawing of 500kV station transformer

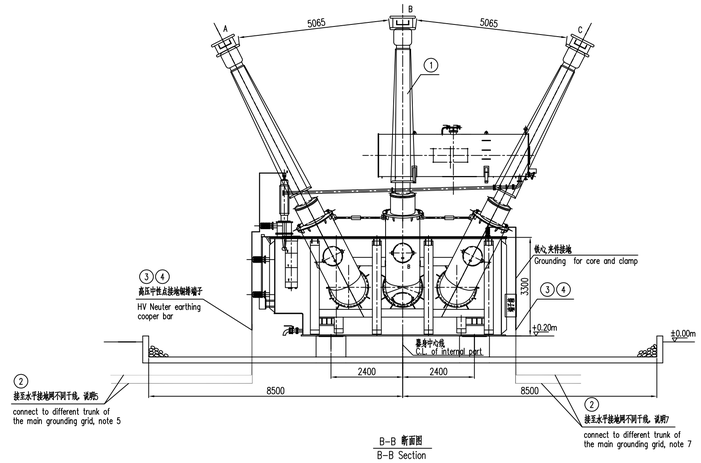

B-B 断面图

B-B Section

说明：

1. 图中尺寸单位为mm。
2. 变压器布置位置见49-B60011S-D0211分册。
3. 安装时注意核对土建预留安装孔及设备支架高度。
4. 500/35kV降压变压器与基础之间安装采用焊接方式。
5. 高压中性点套管接线端子采用-80×8铜排引出接至离压中性点接地铜排端子（距离基础平台 200mm），此部分由变压器厂家成套设计供货并完成。在离压中性点接地铜排端子一点通过2根150mm²铜绞线连接至水平接地网不同干线，具体见B-B断面图。本区域已预留一个垂直接地极引上点，其中一根铜绞线与该引上点连接。
6. 铁芯、夹件分别采用-40×4镀锌扁钢引出接至铁芯、夹件接地铜排端子（距离基础平台200mm），此部分由变压器厂家成套设计供货并完成。
7. 主变本体的接地在一个本地接地用端子通过2根150mm²铜绞线连接至水平接地网不同干线。
8. 变压器基础顶面比地面要高出200mm，千斤顶基础顶面与变压器基础顶面等高。
9. 变压器安装地基应保持水平，变压器基础的倾斜度不应每米不大于±2mm。
10. 油池壁顶面比地面要高出200mm。
11. 油坑内应铺设卵石，卵石的厚度应不小于250mm，卵石直径50~80mm。
12. 器身重91000kg，总油重50700kg，总重196000kg。
13. 本图埋管仅示意定位和埋管数量，材料开列在华东院分册。
14. 全站共2台500kV/35kV降压变压器。材料表按照两台降压变开列。

Note:

1. Unit of all the dimensions in this drawing is mm.
2. The plane drawing of 500/35kV transformer see in the 49-B60011S-D0211 volume.
3. During installation,please pay attention to the reserved installation holes and the height of equipment bracket.
4. 500/35kV transformers and foundation are installed by welding.
5. The high-voltage neutral bushing terminal is connected to its grounding copper bus terminal (200mm away from the transformer base) by the -80×8 copper bar. This part is supplied and completed by the transformer manufacturer. Connect the copper bus terminal to the main grounding grid through two 150mm² copper wires. Please see section B-B . A vertical grounding pole is placed in this area, and one copper wire is connected to it.
6. The core and clamp are respectively connected by -40×4 galvanized flat steel to the core and clamp ground copper terminal (200mm away from the base platform). This part is supplied and completed by the transformer manufacturer.
7. The grounding terminal of the transformer body is connected to the grounding grid by two 150mm² copper wires at a local grounding terminal.
8. The top surface of the transformer foundation is 200mm higher than the ground, and the top surface of the jack foundation is equal to the surface of the transformer foundation.
9. The foundation of the transformer installation should be kept horizontal, and the inclination of the transformer foundation should not be more than ±2 mm.
10. The top surface of the oil pool wall is 200mm higher than the ground.
11. Pebble should be laid in the oil pit. The thickness of the pebbles should be no less than 250mm, and the diameter of the pebbles should be 50~80mm.
12. The body weight is 91000kg, the total insulation oil weight is 50700kg, and the total weight is 196000kg.
13. The buried pipe of this figure only shows the number and position of buried pipes. The materials are listed in the volume of Huadong Design Institute.
14. There are 2 sets of 500kV/35kV transformers in converter station. Two transformers and listed in the equipment material table.

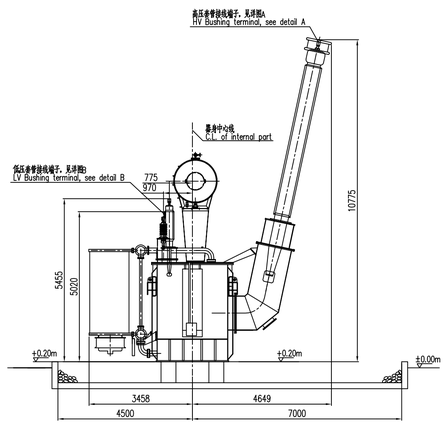

A-A 断面图

A-A Section

高压套管接线端子（详图A）

HV Bushing terminal(Detail A)

铜质 Cooper

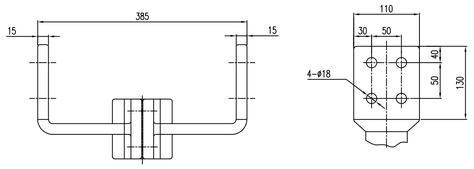

主变本体接地端子

Grounding for main tank

不锈钢 steel

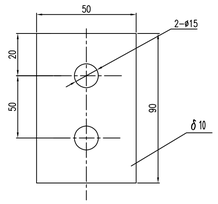

低压套管接线端子（详图B）

LV Bushing terminal(Detail B)

铜质 Cooper

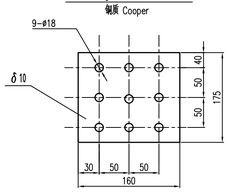

铁心、夹件接地铜排端子示意

Grounding for core and clamp

铜质 Cooper

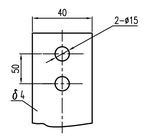

高压中性点接地铜排端子

HV Neuter earthing cooper bar

铜质 Cooper

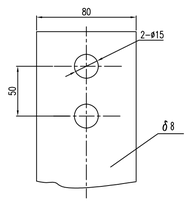

各接线端子详图

Detail drawing of terminals

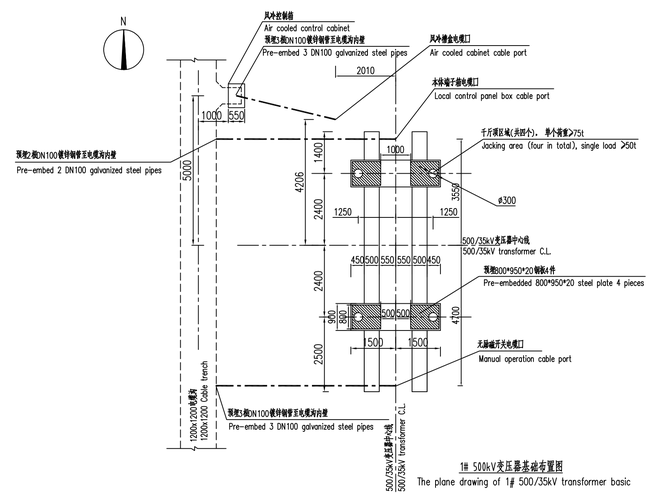

1# 500kV变压器基础布置图

The plane drawing of 1# 500/35kV transformer basic

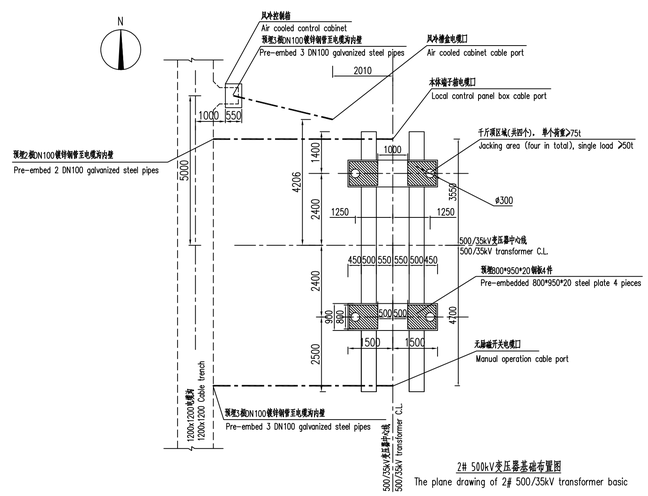

2# 500kV变压器基础布置图

The plane drawing of 2# 500/35kV transformer basic

电气安装B:包材料表 Material bill of electrical contractor B

序号 Item No	名称 Name	型号及规范 Specification	单位 Unit	数量 Quanity	供货方 Supplier	备注 Comments
1	500kV站用变压器 500kV substation transformer	SF-130000/500 (510±4×2.5%)/35kV YNd11	台 Set		甲供 Contractor supply	山东电力设备有限公司，列入 B60011S-D0211分册 Shandong Power Equipment Co., Ltd, China Listed in volume B60011S-D0211
2	铜绞线 Copper wire	150mm²	米 m	80	乙供 Construction supply	
3	铜接子 Copper hardware	DTM-150	套 Pcs	8	乙供 Construction supply	
4	螺栓 Bolt	M14	套 Pcs	8	乙供 Construction supply	用于变压器接地(附螺母,弹簧垫,垫圈) Used for transformer grounding(with nuts, spring washers, washers)
5	放热焊点 Exothermic solder joint	A: 150mm² 铜绞线, B: 120mm² 铜绞线 A: 150mm² Copper wire B: 120mm² Copper wire	个 Set	16	乙供 Construction supply	

巴基斯坦默蒂亚里—拉合尔±660kV直流输电工程

±660kV HVDC Project from Matiari to Lahore in Pakistan

NATIONAL TRANSMISSION & DESPATCH COMPANY (NTDC) LIMITED PAKISTAN

CONTRACTOR 国家电网 STATE GRID 中国电力技术装备有限公司 CHINA ELECTRIC POWER TECHNOLOGY EQUIPMENT CO.,LTD.

拉合尔±660kV换流站

±660kV Lahore Converter Station

设计阶段 PHASE: 施工图 Detail Design

M L H V D C - E N G - C S I - D D - E C - 0 2 1 2 - 0 0 2 A

	姓名 Name	日期 Date
设计 Designed	王春亮	2019.03.22
校核 Checked	张江龙	2019.03.22
审核 Reviewed	田俊强	2019.03.22
批准 Approved	刘伟	2019.03.22

500/35kV站用变压器安装图

The installation drawing 500/35kV station transformer

专业 Speciality	会签 Sign	日期 Date
结构	程健	2019.03

比例 Scale: 1:100

图号 DWG NO.: B60011S-D0212-002

版本 REV.: A

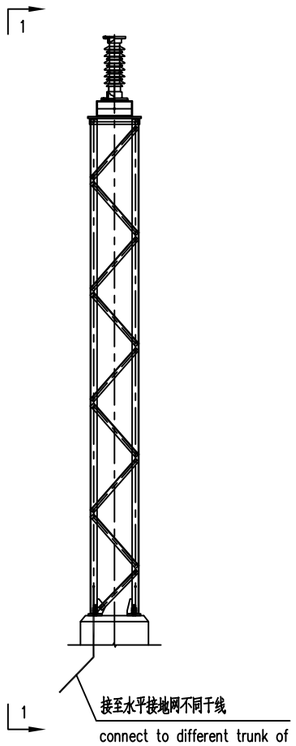

35kV绝缘子安装
Installation of 35kV insulator

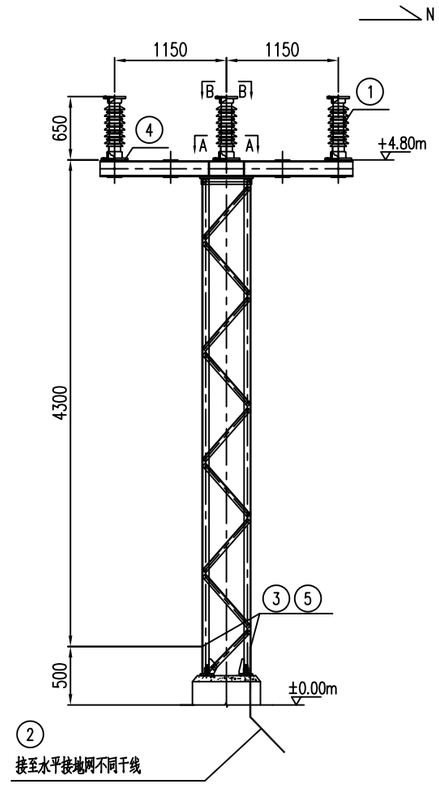

1-1断面图
Section 1-1

电气安装B包材料表 Material bill of electrical contractor B

序号 Item No	名称 Name	型号及规范 Specification	单位 Unit	数量 Quanity	供货方 Supplier	备注 Comments
1	35kV支柱绝缘子 35kV support insulator	40.5kV, 12.5KN	只 Pcs		甲供 Contractor supply	抚顺电瓷制造有限公司，列入 B60011S-D0211分册 Fushun Electric Porcelain Manufacturing Co., Ltd. Listed in volume B60011S-D0211
2	铜绞线 Copper wire	150mm^2	米 m	20	乙供 Construction supply	
3	铜鼻子 Copper hardware	DTM-150	套 Pcs	2	乙供 Construction supply	
4	螺栓 Bolt	M16	套 Pcs	24	乙供 Construction supply	用于绝缘子安装 Used for insulator installation
5	螺栓 Bolt	M14	套 Pcs	2	乙供 Construction supply	用于绝缘子接地 Used for insulator grounding
6	放热焊点 Exothermic solder joint	A: 150mm^2 铜绞线，B: 120mm^2 铜绞线 A: 150mm^2 Copper wire B: 120mm^2 Copper wire	个 Set	2	乙供 Construction supply	

说明：

1. 本图表示电抗器回路的支柱绝缘子的安装。设备平面布置见图"B60011S-D0211-003"。
2. 施工前请核对绝缘子厂家资料，无问题后方可施工。安装时注意核对土建预留安装孔。
3. 绝缘子的支架通过150mm^{2}铜绞线引两点与主地网不同接地干线可靠连接。
4. 施工前请核对端子板开孔尺寸，并配合好相应金具开孔。
5. 材料表中材料按2组（3相）绝缘子开列。500kV站用变压器区域有2组该设备。

Note:

1. The installation of support insulators those in reactor circuit is showed in this drawing. Equipment layout shown in Figure *'B60011S-D0211-003'*.
2. Before construction, please check the insulator manufacturers information, no problem before construction. Pay attention to check the civil reserved installation holes.
3. Leading two point of insulator bracket through 150mm^2 copper wire connect reliably to the different grounding trunk of main ground network.
4. Before construction, please check the size of the terminal board hole, and fit opening of the corresponding fittings.
5. Materials in the table are listed as one set of insulators. There are two sets of insulators in 500kV station transformer area.

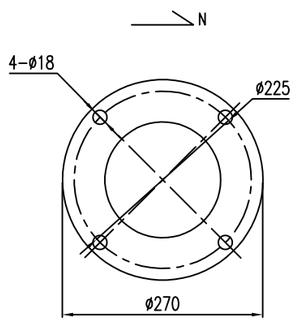

A-A 断面图
A-A Section

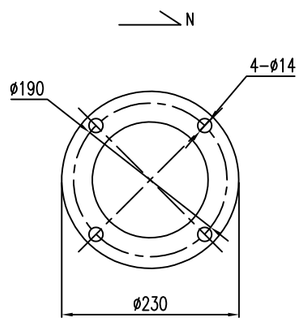

B-B 断面图
B-B Section

结构	程健	2019.03
专业	会签	日期
Speciality	Sign	Date

巴基斯坦默蒂亚里—拉合尔±660kV直流输电工程
±660kV HVDC Project from Matiari to Lahore in Pakistan

NATIONAL TRANSMISSION & DESPATCH COMPANY (NTDC) LIMITED PAKISTAN

CONTRACTOR 国家电网 STATE GRID 中国电力技术装备有限公司 CHINA ELECTRIC POWER EQUIPMENT AND TECHNOLOGY CO.,LTD.

拉合尔±660kV换流站
±660kV Lahore Converter Station

设计阶段 PHASE: 施工图 Detail Design

M L H V D C - E N G - C S I - D D - E C - 0 2 1 2 - 0 0 3 A

	姓名 Name	日期 Date
设计 Designed	王鹏	2019.03.22
校核 Checked	李延龙	2019.03.22
审核 Reviewed	田俊强	2019.03.22
批准 Approved	刘伟	2019.03.22
比例 Scale	1:60	图号 DWG NO.

35kV绝缘子安装图
The installation drawing of 35kV insulator

B60011S-D0212-003

版本 REV. A

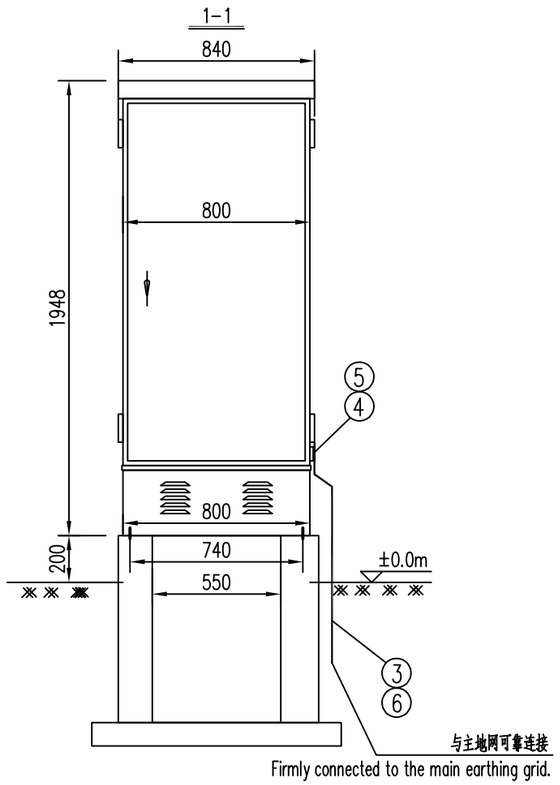

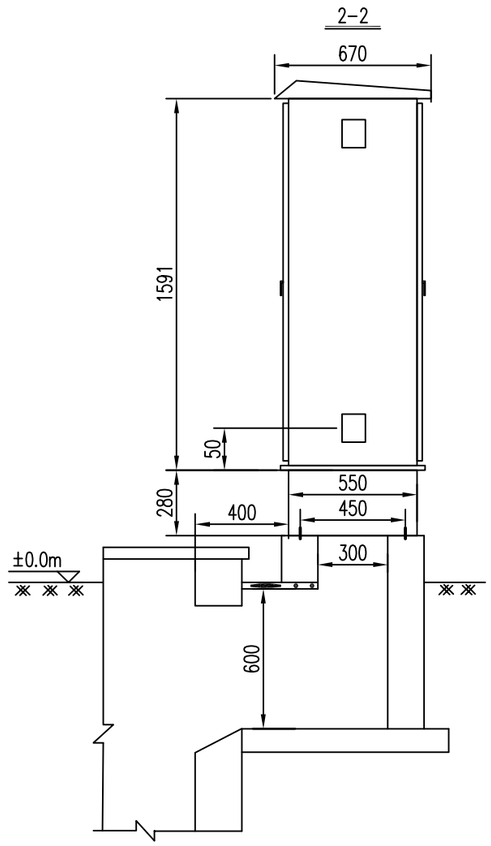

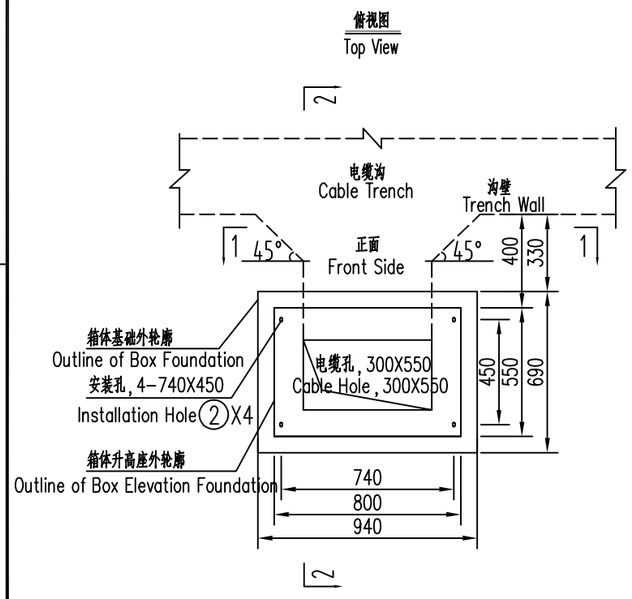

说明：

1.500kV/35kV降压变压器风冷控制箱全站共有2个，其具体定位见B60011S-D0211-003。

2.本图中材料按2台落地箱体开列。

3.核对厂家到货箱体安装孔尺寸。

4.图中尺寸单位为mm。

Note:

1.There are two air-cooling control cabinets for 500kV/35kV transformers. Its location see in the B60011S-D0211-003 Volume.

2.Equipment and materials are listed for two boxes.

3.Mounting holes of the boxes should be checked.

4.All units of dimension in this drawing are mm.

No.	Name	Type and Details	Unit	Qty.	Remark
6	Exothermic Welding	A : 50mm² Copper Strand B : 120mm² Copper Strand	Set	2	Supplied by Constructor
5	Galvanized Bolt	M8 with Nuts, 2 Flat Pads, 1 Spring Pad, etc.	Set	2	Supplied by Constructor
4	Copper Terminal	DT-50	Set	2	Supplied by Constructor
3	Copper Strand	50mm²	m	20	Supplied by Constructor
2	Expansion Bolt	M10 with Nuts, 2 Flat Pads, 1 Spring Pad, etc.	Set	8	Supplied by Constructor
1	Floor Box		Set	2	Supplied by Owner

Table of Equipment and Materials

编号	名　称	型号及规范	单位	数量	备　注
6	放热焊接	A:50mm²铜绞线　B：120mm²铜绞线	个	2	乙供
5	镀锌螺栓	M8　附螺帽，2个平垫，1个弹垫等	套	2	乙供
4	铜鼻子	DT-50	套	2	乙供
3	铜绞线	50mm²	米	20	乙供
2	膨胀螺栓	M10　附螺帽，2个平垫，1个弹垫等	套	8	乙供
1	落地箱体		个	2	甲供

主要设备材料表

巴基斯坦默蒂亚里—拉合尔±660kV直流输电工程

±660kV HVDC Project from Matiari to Lahore in Pakistan

NATIONAL TRANSMISSION & DESPATCH COMPANY (NTDC) LIMITED PAKISTAN

CONTRACTOR 国家电网 STATE GRID 中国电力技术装备有限公司 CHINA ELECTRIC POWER EQUIPMENT AND TECHNOLOGY CO.,LTD.

拉合尔±660kV换流站

±660kV Lahore Converter Station

设计阶段 PHASE: 施工图 Detailed Design

M L H V D C - L C S - C E T - D D - E C - 0 2 1 2 - 0 0 4 A

	姓名 Name	日期 Date
设计 Designed	王鹏	2019.03.22
校核 Checked	李远	2019.03.22
审核 Reviewed	田俊强	2019.03.22
批准 Approved	刘伟	2019.03.22
比例 Scale	1:100	图号 DWG NO.

500/35kV站用变压器风冷控制箱安装图

The installation drawing of 500/35kV station transformer air cooling control box

B60011S-D0212-004

版本 REV. A

结构	程健	2019.03
专业 Speciality	会签 Sign	日期 Date

电气安装B包材料表 Material bill of electrical contractor B

序号 Item No	名称 Name	型号及规范 Specification	单位 Unit	数量 Quanity	供货方 Supplier	备注 Comments
1	风冷控制箱 Air cooling control box		台 Set	2	甲供 Contractor supply	保定博为瀚翔电气有限公司 Baoding Boweihongxiang Electric Co.,LTD
2	铜绞线 Copper wire	$150mm^2$	米 m	100	乙供 Construction supply	
3	铜绞线 Copper wire	$50mm^2$	米 m	20	乙供 Construction supply	
4	铜鼻子 Copper hardware	DTM-150	套 Pcs	10	乙供 Construction supply	
5	铜鼻子 Copper hardware	DT-50	套 Pcs	2	乙供 Construction supply	
6	螺栓 Bolt	M16	套 Pcs	24	乙供 Construction supply	用于绝缘子安装 Used for insulator installation
7	螺栓 Bolt	M14	套 Pcs	10	乙供 Construction supply	用于接地 Used for grounding
8	膨胀螺栓 Expansion Bolt	M10	套 Pcs	8	乙供 Construction supply	用于控制箱安装 Used for box installation
9	螺栓 Bolt	M8	套 Pcs	2	乙供 Construction supply	用于接地 Used for grounding
10	放热焊点 Exothermic solder joint	A: $150mm^2$ 铜绞线, B: $120mm^2$ 铜绞线 A: $150mm^2$ Copper wire B: $120mm^2$ Copper wire	个 Set	18	乙供 Construction supply	
12	放热焊点 Exothermic solder joint	A: $50mm^2$ 铜绞线, B: $120mm^2$ 铜绞线 A: $50mm^2$ Copper wire B: $120mm^2$ Copper wire	个 Set	2	乙供 Construction supply	

巴基斯坦默蒂亚里—拉合尔±660kV直流输电工程

±660kV HVDC Project from Matiari to Lahore in Pakistan

NATIONAL TRANSMISSION & DESPATCH COMPANY (NTDC) LIMITED PAKISTAN

CONTRACTOR 国家电网 STATE GRID 中国电力技术装备有限公司 CHINA ELECTRIC POWER EQUIPMENT AND TECHNOLOGY CO.,LTD.

拉合尔±660kV换流站

±660kV Lahore Converter Station

设计阶段 PHASE: 施工图 Detail Design

M L H V D C - E N G - C S I - D D - E C - 0 2 1 2 - 0 0 5 A

	姓名 Name	日期 Date
设计 Designed	王[illegible]	2019.03.22
校核 Checked	[illegible]	2019.03.22
审核 Reviewed	田[illegible]	2019.03.22
批准 Approved	[illegible]	2019.03.22

材料汇总表

Material summarization sheet

比例 Scale | 图号 DWG NO. B60011S-D0212-005 | 版本 REV. A